F-15 Twin 64mm



AH015P - F-15 Twin 64mm - Operating Manual

Instruction manual

Warning:
This manual contains important information that will help you maintain and operate your model aircraft in a reliable and safe manner. Please read the instructions and warnings carefully prior to assembly, setup or use.

As this model aircraft is a sophisticated hobby product, it must be flown with safety and common sense in mind, failure in doing so may result in injury or property damage. This product is not intended for use by children without direct adult supervision.

Safety precautions and warnings

As the user, you are solely responsible for the safe operation and maintenance of this product. Follow the directions and warnings listed in this manual, as well as that of supporting equipment (chargers, batteries etc.) and always use common sense.

This is not a toy. Not for children under 14 years of age.

- Always operate your model in an open area away from buildings, cars, traffic or people. Never operate near people-especially children who can wander unpredictably. Never operate in populated areas for any reason, where injury or damage can occur.
- Always keep a safe distance in all directions around your model to avoid collisions or injury. This model is controlled by a radio signal subject to interference from many sources outside your control. Interference can cause momentary loss of control.
- Never catch the aircraft while it is in flight, the structure of the fuselage was not designed and protected for this purpose. Never operate your model in bad weather, including in excessively windy or precipitating conditions.
- Never operate your model with low transmitter batteries.
- Keep your throttle quadrant in its lowest position prior and after every flight. Use the throttle cut function if able. Always use fully charged batteries and move batteries before disassembly.
- Avoid water exposure to all equipment not specifically designed and protected for this purpose.
- Avoid cleaning this product with chemicals.
- Never lick or place any part of your model in your mouth as it could cause serious injury or even death.
- Keep all chemicals, small parts and anything electrical out of the reach of children.

Introduction

The McDonnell Douglas F-15 Eagle is an American twin-engine, all-weather tactical fighter aircraft designed by McDonnell Douglas.

The Eagle first flew in July 1972, and entered service in 1976. It is among the most successful modern fighters, with over 100 victories and no losses in aerial combat 14 months in the making, the Arrows F-15 is lovingly recreated- from accurate panel lines to the adrenaline-pumping performance this is as real as it gets!

With its twin 64mm EDF power system, large wing area and highly strengthened wing structure- the Arrows F-15 can perform advanced aerobatic flight maneuvers along with exceptional high alpha capabilities without losing control surface authority.

The 900mm wingspan Arrows F-15 was designed using hundreds of photos and aircraft design files. Built from high-strength EPO material, no detail was missed in the design of this faithful replica.

A fan of scale? The Arrows F-15 has electric CNC retracts, functional flaps, LED navigation lights, pilot figure, antennae, machine guns, auxiliary fuel tanks, missiles and numerous other scale components. A magnetic nose cone and latch-type canopy allow these components to stay in place even in high-G maneuvers.

Power comes courtesy of two 12 bladed 64mm EDFs (using 2840-2280KV motors), with dual 40A ESCs and a 22.2V 3300mAh 35C battery pack. This power system gives the aircraft a turbine-like note and ultra-high power-to-weight ratio.

Painted in the Oregon air national guard F-15C trim scheme, this is one of the most attractive F-15 Eagles on the market today.

Looking for a dog-fighting powerhouse with stable low-speed characteristics and excellent handling to take on the Mig-29? Look no further than the Arrows hobby F-15!

Features

- Dual 12-bladed 64mm EDFs, dual 2840 2280KV motors, dual 40A ESC with external 5.5V 5A BEC
- Highly realistic scale components: Electric CNC retracts, functional flaps, LED navigation lights, pilot figure, antennae, machine guns, auxiliary fuel tanks and missiles
- Screw-together assembly, magnetic nose cone, latch-type canopy and ball-link pushrods

Table of contents

Introduction ---------- 3
Specifications ---------- 3
Kit contents ---------- 3
Model Assembly ---------- 4
Battery installation ---------- 7
Receiver diagram ---------- 7
Preflight check ---------- 7
Clevis installation ---------- 8
Control horn and servo arm settins ---------- 9
Centre of gravity (CG) ---------- 9
Before flying the model ---------- 9
Flight tips ---------- 10
Troubleshooting ---------- 11
Spare parts list ---------- 11

Specifications

Wingspan	1345mm
Lenght	900mm
Flying weight	2600g
Motor size	2840-KV2280 (2pcs)
Wing load	91.5g/dm^2
Wing area	28.4dm^2
ESC	Twin 40A ESC with 5.5V 5A BEC
Servo	9g (9pcs)
Recommended battery	22.2V 3300mAh 35C

Kit contents

Before assembly, please inspect the contents of the kit. The photo below details the contents of the kit with labels. If any parts are missing or defective, please identify the name or part number (refer to the spare parts list near the end of the manual) then contact your local shop.

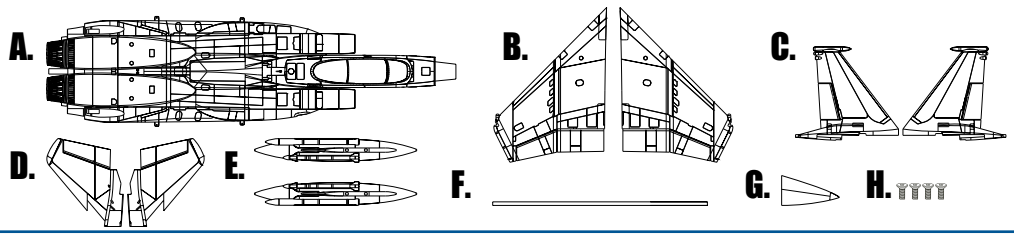

A: Fuselage
B: Main wing
C: Vertical stabilizer
D: Horizontal stabilizer
E: Missile set
F: Wing spar
G: Nose cone
H: Screw set (HKM3.0X10*4)

MODEL ASSEMBLY

Main wing assembly

1. Slide the spar into the fuselage and the wing halves over the spar. Connect the servo leads and push the wing halves into the slots on the fuselage.

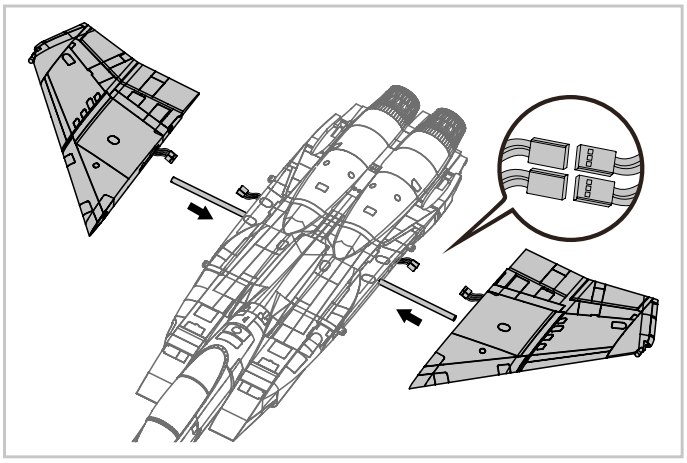

2. Secure using the included screws.

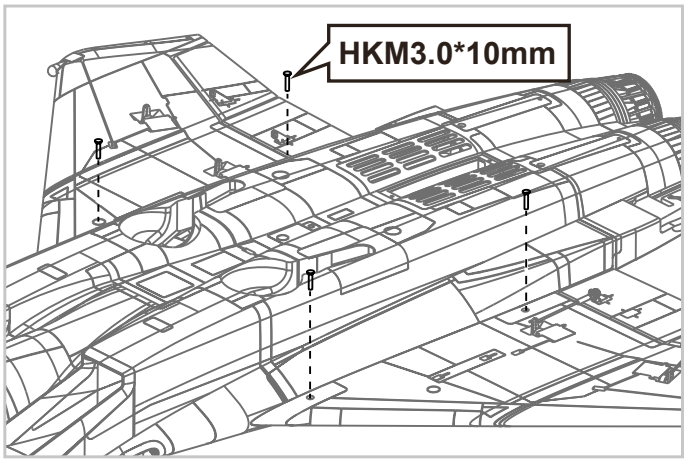

Installation of the vertical and horizontal stabilizers

1.Apply glue to the areas shown below, connect the servo connectors and adhere the stabilizers to the fuselage.

Use a special cyanoacrylate glue for foam

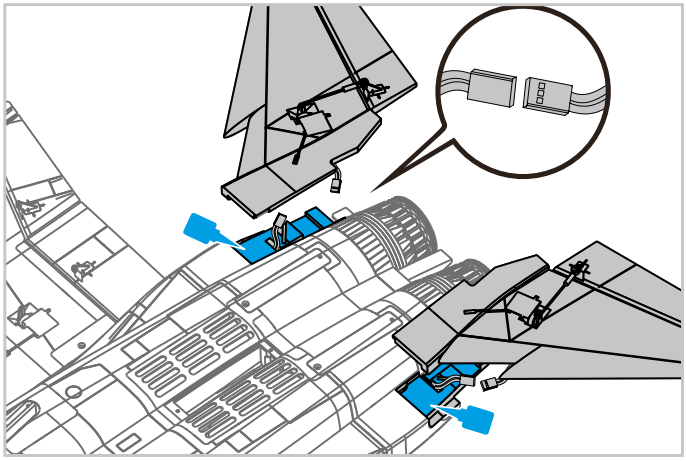

2.Apply glue to the areas shown below, connect the servo connectors and adhere the vertical fins to the fuselage

Use a special cyanoacrylate glue for foam

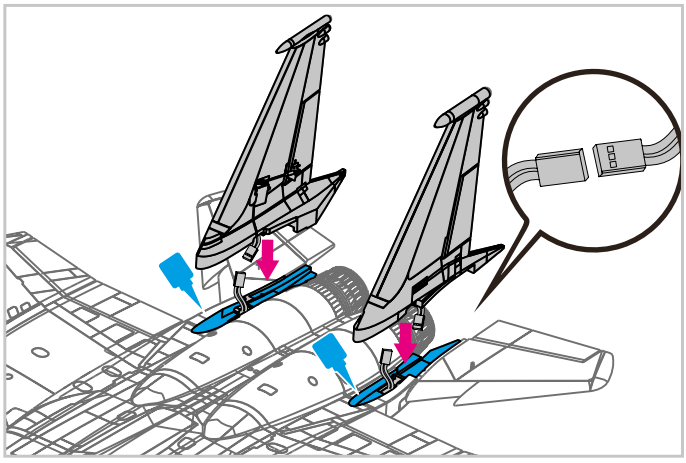

MODEL ASSEMBLY

Missile installation

Slide firmly the missiles onto the wings.

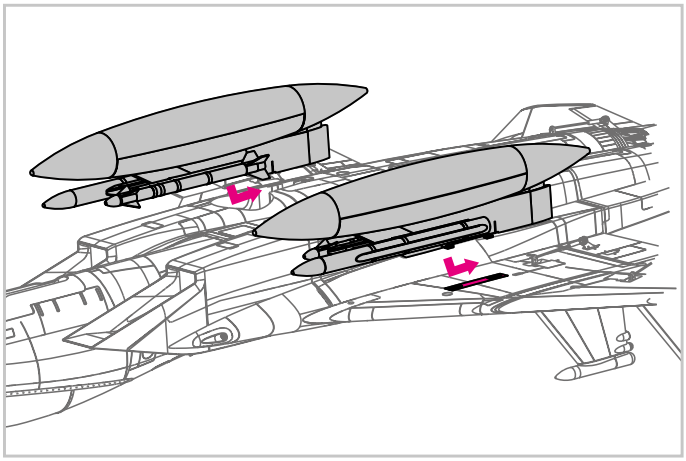

Nose cone installation

Install the nose cone onto the nose of the aircraft, note the orientation of the component.

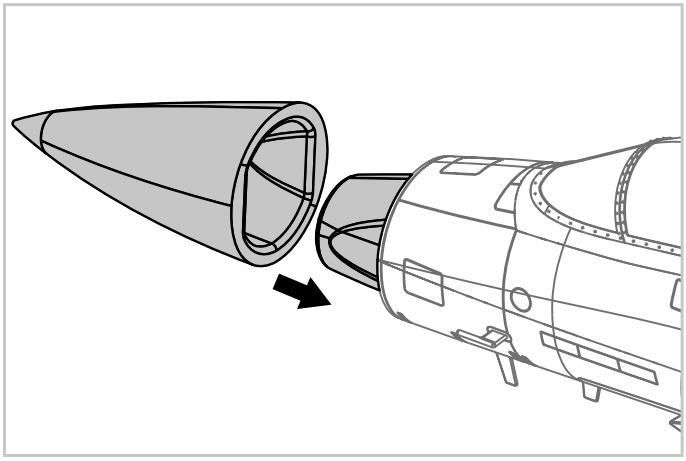

BATTERY INSTALLATION

1. Remove the battery cover.
2. Remove the hook and loop tape from the fuselage. Apply the looped surface to the battery.
3. Install the battery into the fuselage- securing it with the preinstalled battery straps.

Note: The weight of each battery may vary due to different manufacturing techniques. Move the battery fore or aft to achieve the optimal center of gravity.

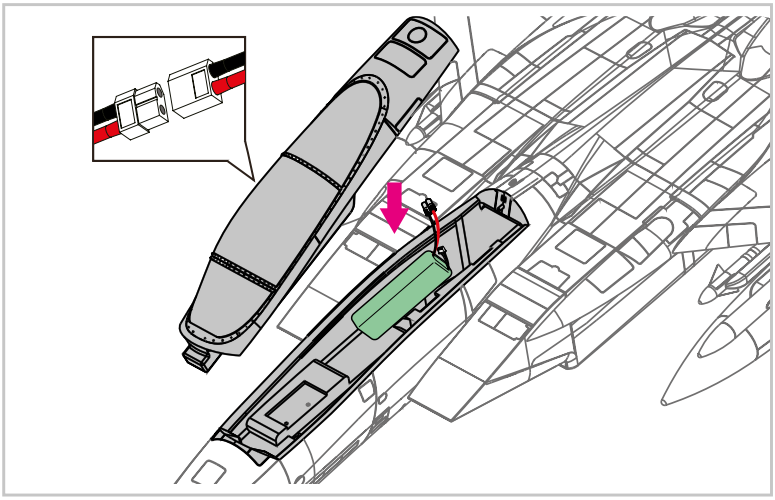

Receiver diagram

The cables from the servo connector board should be connected to your receiver in the order shown. Note that the LEDs can be powered by any spare channel on the receiver. Tuck the wire leads into the recessed cavity towards the rear of the battery hatch.

		RECEIVER
Ailero	1	Channel-1 (Aile.)
Elevator	2	Channel-2 (Elev.)
Throttle	3	Channel-3 (Thro.)
Rudder	4	Channel-4 (Rudd)
Spare	5	Channel-5 (Spare)
Spare	6	Channel-6 (Spare)

PREFLIGHT CHECK

Important ESC and model information

1. The ESC included with the model has a safe start. If the motor battery is connected to the ESC and the throttle stick is not in the low throttle or off position, the motor will not start until the throttle stick is moved to the low throttle or off position. Once the throttle stick is moved to the low throttle or off position, the motor will emit a series of beeps. Several beeps with the same tune means the ESC has detected the cells of the battery. The count of the beeps equals the cells of the battery. The motor is now armed and will start when the throttle is moved.
2. The motor and ESC come pre-connected and the motor rotation should be correct. If for any reason the motor is rotating in the wrong direction, simply reverse two of the three motor wires to change the direction of rotation.
3. The motor has an optional brake setting. The ESC comes with brake switched off and we recommend that the model be flown with the brake off. However, the brake could be accidentally switched on if the motor battery is connected to the ESC while the throttle stick is set at full throttle. To switch the brake off, move the throttle stick to full throttle and plug in the motor battery. The motor will beep one time. Move the throttle stick to low throttle or the off position. The motor is ready to run and the brake will be switched off.
4. Battery Selection and Installation. We recommend the 22.2V 3300mAh 35C Li-Po Li-Po battery. If using another battery, the battery must be at least a 22.2V 3300mAh 35C Li-Po battery. Your battery should be approximately the same capacity, dimension and weight as the 22.2V 3300mAh 35C Li-Po Li-Po battery to fit the fuselage without changing the center of gravity significantly.

PREFLIGHT CHECK

Transmitter and Model setup

After assembly and prior to your first flight, make sure all control surfaces respond correctly to your transmitter by referring to the diagram below.

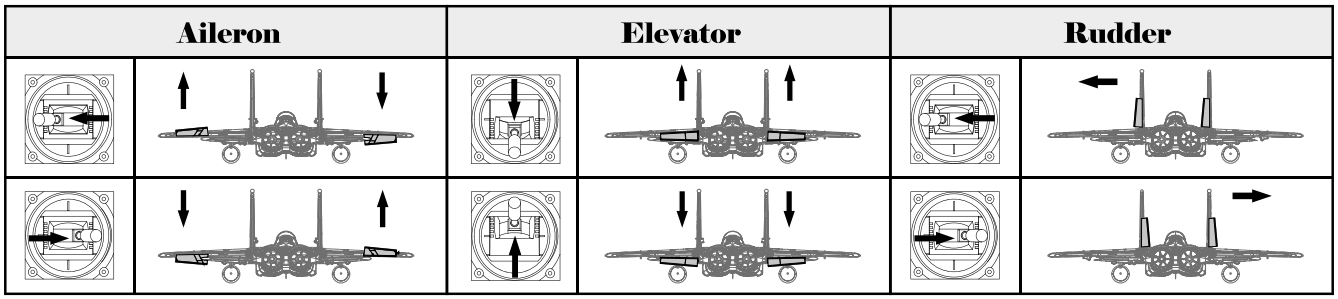

Control setup

The suggested control throw setting for the model are as follows (dual rate setting):

Tip: The maiden flight should always be flown using low rates, fly the aircraft until you are familiar with its characteristics prior to trying high rates. Make sure the aircraft is flying at altitude and adequate velocity prior to using high rates, as the aircraft will be sensitive to control inputs with the larger control surface movements.

	High rate	Low Rate
Elevetor	16mm Up/Down	12mm Up/Down
Aileron	18mm Up/Down	14mm Up/Down
Rudder	16mm Left/Right	12mm Left/Right

Clevis installation

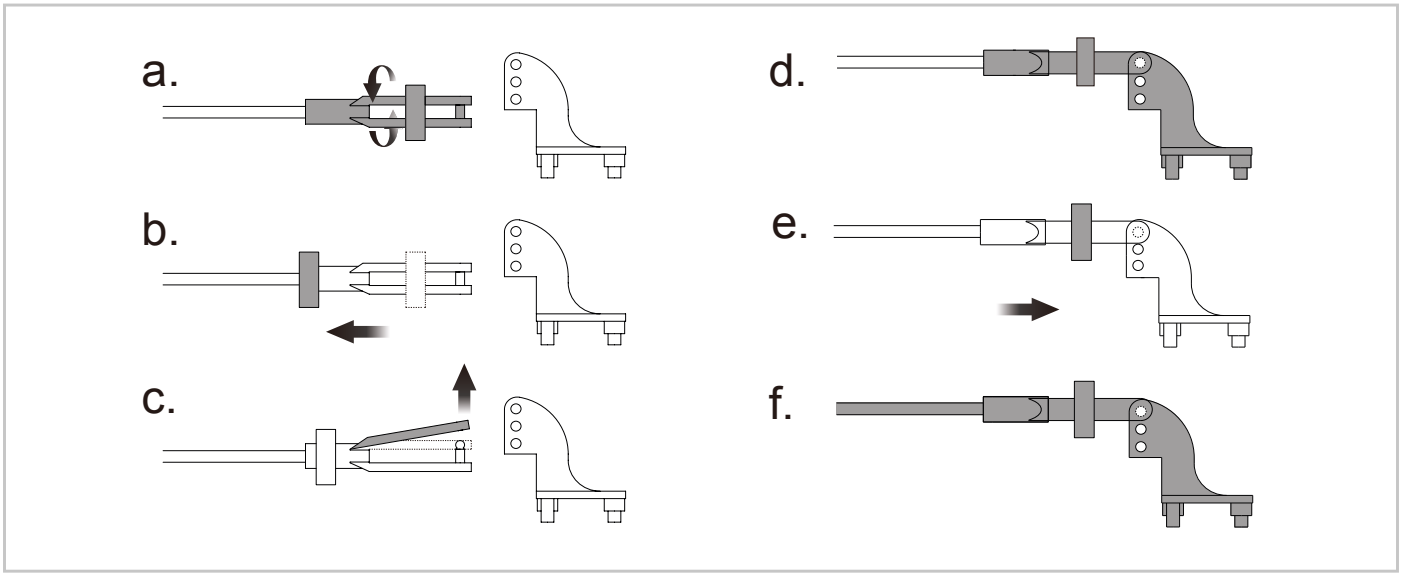

1. Pull the tube from the clevis to the linkage.
2. Carefully spread the clevis, then insert the clevis pin into the desired hole in the control horn.
3. Move the tube to hold the clevis on the control horn.

CONTROL HORN AND SERVO ARM SETTINGS

1. The table shows the factory settings for the control horns and servo arms. Fly the aircraft at the factory settings before making changes.

2. After flying, you may choose to adjust the linkage positions for the desired control response.

	Horns	Arms
Elevator	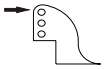	
Rudder	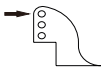	
Ailerons	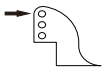	

=More control	
	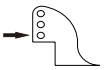
=Less control	
	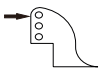

CENTRE OF GRAVITY

Finding the correct center of gravity is critical in ensuring that the aircraft performs in a stable and responsive manner. Please adjust the weight distribution so the aircraft balances in the range stated on the diagram.

- Depending on the capacity and weight of your chosen flight batteries, move the battery forward or backward to adjust the center of gravity.
- If you cannot obtain the recommended CG by moving the battery to a suitable location, you can also install a counterweight to achieve correct CG. However, with the recommended battery size, a counterweight is not required. We recommend flying without unnecessary counterweight.

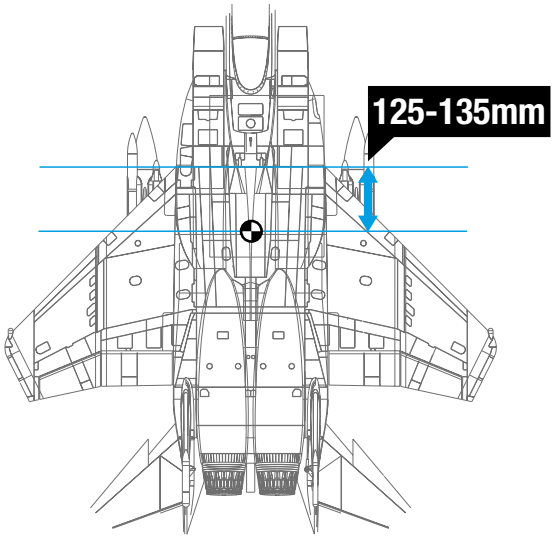

BEFORE FLYING THE MODEL

Find a suitable flying site

Find a flying site clear of buildings, trees, power lines and other obstructions. Until you know how much area will be required and have mastered flying your plane in confined spaces, choose a site which is at least the size of two to three football fields - a flying field specifically for R/C planes is best. Never fly near people - especially children, who can wander unpredictably.

Performing a range check

A radio range check should be performed prior to the first flight of the day. This test may assist you in detecting electronic problems that may lead to a loss of control- problems such as low transmitter batteries, defective or damaged radio com-ponents or radio interference. This usually requires an assistant and should be done at the flying site.

BEFORE FLYING THE MODEL

Always turn your transmitter on first. Install a fully charged battery in the battery bay, then connect it to the ESC. In this process, make sure that the throttle cut functionality is on, and that the throttle stick is secured in its lowest position- other-wise, the propeller/fan will engage and possibly cause bodily harm.

Note: Please refer to your transmitter manual that came with your radio control system to perform a ground range check. If the controls are not working correctly or if anything seems wrong, do not fly the model until you correct the problem. Make certain all the servo wires are securely connected to the receiver and the transmitter batteries have a good connection.

Monitor your flight time

Monitor and limit your flight time using a timer (such as a stopwatch or on the transmitter, if available). As modern Lithium Polymer batteries are not designed to discharge completely, when the battery runs low, the ESC will lower then completely cut the power to the motors to protect the battery.Often (but not always) power can be briefly restored after the motor cuts off by holding the throttle stick all the way down for a few seconds.To avoid an unexpected dead-stick landing on your first flight,set your timer to a conservative 4 minutes. When your alarm sounds you should land right away.

FLIGHT TIPS

Take off

Point the aircraft into the wind while slowly applying power until the aircraft starts to track straight, use the rudder when necessary. When the aircraft reaches takeoff speed, ease back on the elevator stick until the aircraft is climbing at a constant rate without decelerating. Climbing at too steep of an angle at the relatively low speeds of a takeoff-climb may result in an aerodynamic stall.

Flying

Always choose a wide-open space for flying your plane. It is ideal for you to fly at a sanctioned flying field. If you are not flying at an approved site always avoid flying near houses, trees, wires and buildings. You should also be careful to avoid flying in areas where there are many people, such as busy parks, schoolyards, or soccer fields. Consult laws and ordinances before choosing a location to fly your aircraft. After takeoff, gain some altitude. Climb to a safe height before trying technical manoeuvres.

Landing

Land the aircraft when you start to feel sluggish motor response. If using a transmitter with a timer, set the timer so you have enough flight time to make several landing approaches.The model's three point landing gear allows the model to land on hard surfaces. Align model directly into the wind and fly down to the ground. Fly the airplane down to the ground using 1/4-1/3 throttle to keep enough energy for proper flare. Before the model touches down, always fully decrease the throttle to avoid damaging the propeller or other components. The key to a great landing is to manage the power and elevator all the way to the ground and set down lightly on the main landing gear. With some practice, you will be able to set the aircraft gently on its main gear and hold it that way until the speed reduces enough where the nose wheel (tricycle landing gear aircraft) or tail wheel (tail draggers) settles onto the ground.

Maintenance

Repairs to the foam should be made with foam safe adhesives such as hot glue, foam safe CA, and 5min epoxy. When parts are not repairable, see the spare parts list for ordering by item number.

Always check to make sure all screws on the aircraft are tightened. Pay special attention to make sure the spinner is firmly in place before every flight.

TROUBLESHOOTING

PROBLEM	POSSIBLE CAUSE	SOLUTION
Aircraft will not respond to the throttle but responds to other controls.	• ESC is not armed. • Throttle channel is reversed.	• Lower throttle stick and throttle trim to lowest settings. • Reverse throttle channel on transmitter.
Excessive vibration or propeller noise.	• Damaged spinner, propeller, motor or motor mount. • Loose propeller and spinner parts. Propellor installed backwards.	• Replace damaged parts. • Tighten parts for propeller adapter, propeller and spinner. • Remove and install propeller correctly.
Reduced flight time or aircraft underpowered.	• Flight battery charge is low. Propeller installed backward. Flight battery damaged.	• Completely recharge flight battery. • Replace flight battery and follow flight battery instructions.
Control surfaces unresponsive or sluggish.	• Control surface, control horn, linkage or servo damage. • Wire damaged or connections loose.	• Replace or repair damaged parts and adjust controls. • Do a check of connections for loose wiring.
Controls reversed.	• Channels are reversed in the transmitter.	• Do the control direction test and adjust controls for aircraft and transmitter.
Motor loses power Motor power pulses then motor loses power.	• Damage to motor, or battery. • Loss of power to aircraft. • ESC uses default soft Low Voltage Cutoff(LVC).	• Do a check of batteries, transmitter, receiver, ESC, motor and wiring for damage(replace as needed). • Land aircraft immediately and recharge flight battery.
LED on receiver flashes slowly.	• Power loss to receiver.	• Check connection from ESC to receiver. • Check servos for damage. • Check linkages for binding.

SPARE PARTS LIST

AHAN101	Fuselage	AHAN117	Landing gear cover
AHAN102	Mainwing set	AHAN118	Front landing gear set
AHAN103	Horizontal stabilizer	AHAN119	Main landing gear set
AHAN104	Vertical stabilizer	AHAN120	Front landing gear system
AHAN105	Cockpit	AHAN121	Main landing gear system
AHAN106	Cowl	AHRE006	EL Retract
AHAN107	Wing tube	AHRE007	EL Retract
AHAN108	Airspeed head	AHESC40A-Twin	Twin 40A ESC
AHAN109	Linkage rods	AHBEC5A	5A BEC
AHAN110	Wheel set	AH9GP	9g gear servo positive
AHAN111	Screw set	AH9GR	9g gear servo reverse
AHAN112	Decal set	AH64MM12B	64mm Ducted Fan(12-blade)
AHAN113	Control horn set	AHKV2280	Brushless motor 2840-KV2280 Motor
AHAN114	Dummy armament set		
AHAN115	LED set		
AHAN116	Supporting rod		

This manual is the property of Pro Models and is protected by copyright ©.



Arrows RC is distributed by Pro Models

Geelseweg 80 • 2250 Olen • Belgium • info@promodels.be