F86 Sabre



AH024PV - F86 Sabre - 64mm - Operating Manual

Instruction manual

Warning:
This manual contains important information that will help you maintain and operate your model aircraft in a reliable and safe manner. Please read the instructions and warnings carefully prior to assembly, setup or use.

As this model aircraft is a sophisticated hobby product, it must be flown with safety and common sense in mind, failure in doing so may result in injury or property damage. This product is not intended for use by children without direct adult supervision.

Safety precautions and warnings

As the user, you are solely responsible for the safe operation and maintenance of this product. Follow the directions and warnings listed in this manual, as well as that of supporting equipment (chargers, batteries etc.) and always use common sense.

This is not a toy. Not for children under 14 years of age.

- Always operate your model in an open area away from buildings, cars, traffic or people. Never operate near people-especially children who can wander unpredictably. Never operate in populated areas for any reason, where injury or damage can occur.
- Always keep a safe distance in all directions around your model to avoid collisions or injury. This model is controlled by a radio signal subject to interference from many sources outside your control. Interference can cause momentary loss of control.
- Never catch the aircraft while it is in flight, the structure of the fuselage was not designed and protected for this purpose. Never operate your model in bad weather, including in excessively windy or precipitating conditions.
- Never operate your model with low transmitter batteries.
- Keep your throttle quadrant in its lowest position prior and after every flight. Use the throttle cut function if able. Always use fully charged batteries and move batteries before disassembly.
- Avoid water exposure to all equipment not specifically designed and protected for this purpose.
- Avoid cleaning this product with chemicals.
- Never lick or place any part of your model in your mouth as it could cause serious injury or even death.
- Keep all chemicals, small parts and anything electrical out of the reach of children.

Introduction

The North American F-86 Sabre was the first US fighter aircraft designed using the German research that showed a 35 degree thin swept wing gave superior transonic performance. The Sabre was the equal of its well-known Korean War opponent, the Mig-15. It was the highest production US jet fighter ever made, with total production of 9860 units. It was manufactured in many variants, and the Navy FJ fighter was a modified version suited for carrier operations. It was the first fighter equipped with air-to-air missiles, and later versions were supersonic in a dive. All in all, it is a classic.

While Arrows Hobby has introduced a number of EDF jets, from the hand tossed Viper to the high end MiG-29 and F-15, our engineering team began with the Marlin 64mm EDF, still the best EDF trainer made. The F-86 is the successor to the Marlin with fixed gear for strength and the same full 5-channel performance with flaps. The plane has excellent performance and agility at high speed and stability during landings.

The smooth 12-blade 64mm fan sounds more realistic than older 5-blade 64mm units others use. Because of the more powerful 2840 3150KV motor and a 40 amp ESC, this plane is capable of top performance even though it is larger than other 64mm F-86' s, with maneuvers such as rolling, diving, looping and inverted flight. The quick release landing gear allow for fast transition from ground take-off to hand launch and facilitates easy transport.

The EPO foam is tough and at 820mm length and 860mm wingspan, it is a perfect 1/10 scale of the original full-scale plane. The contours, panel lines and markings are highly accurate and realistic. The special water-based paint has a very realistic look. Assembly is fast and simple using only a few screws.

Get ready for a new experience in EDF' s with the Arrows 64mm F-86 Sabre.

Features

- High power-to-weight ratio.
- Realistic, scale details.
- Simple and robust airframe.
- Easy to assemble
- No glue required
- Environmentally friendly water-based paint

Table of contents

Introduction ---------- 3
Specifications ---------- 3
Kit contents ---------- 3
Model Assembly ---------- 4
Battery installation ---------- 7
Receiver diagram ---------- 7
Preflight check ---------- 7
Clevis installation ---------- 8
Control horn and servo arm settins ---------- 9
Centre of gravity (CG) ---------- 9
Before flying the model ---------- 9
Flight tips ---------- 10
Troubleshooting ---------- 11
Spare parts list ---------- 11

Specifications

Wingspan	860mm
Lenght	820mm
Flying weight	1050g
Motor size	2840-KV3150
Wing load	69g/dm^2
Wing area	15.2dm^2
ESC	40A
Servo	9g (8pcs)
Recommended battery	4S 2200-2600mAh 35CC

Kit contents

Before assembly, please inspect the contents of the kit. The photo below details the contents of the kit with labels. If any parts are missing or defective, please identify the name or part number (refer to the spare parts list near the end of the manual) then contact your local shop.

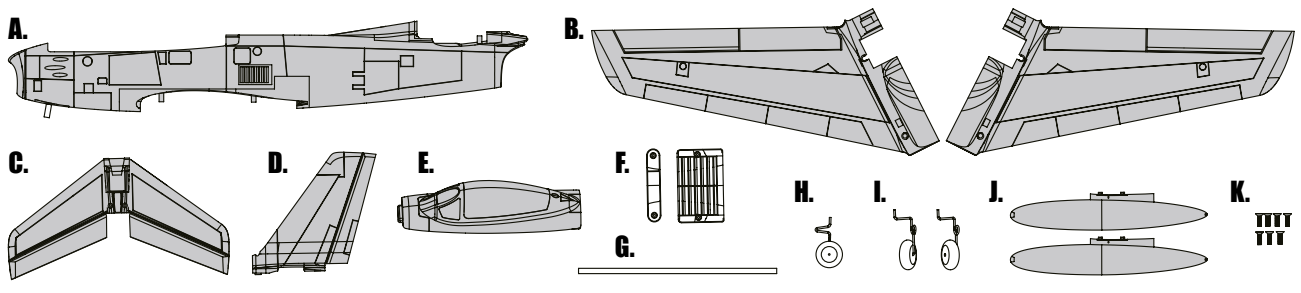

A: Fuselage
B: Main wing set
C: Horizontal stabilizer
D: Vertical stabilizer
E: Canopy
F: Wing bolt plastic set
G: Wing pipe
H: Front landing gear
I: Main landing gear set
J: Auxiliary fuel tank
K: Screw Set (7-HKM3x10mm)

MODEL ASSEMBLY

Wing installation

1. Install the wing spar through the main wing set pass-through as shown.

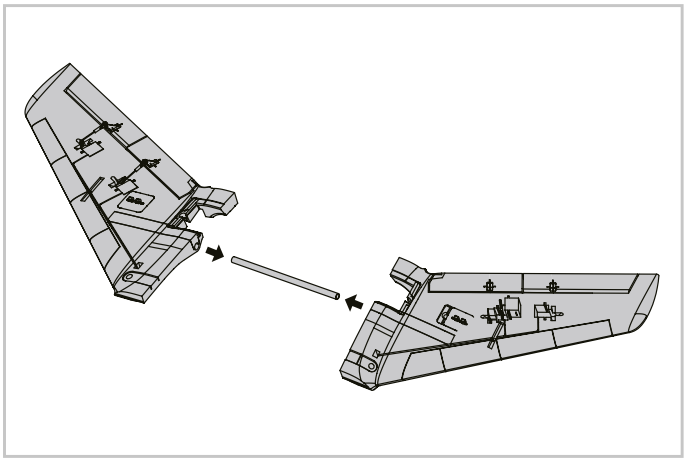

2. Guide the servo wire into the cockpit as shown, fix the main wing to fuselage using the included plastic parts and screws, and then connect the Y-harness wires of CH1 and CH6.

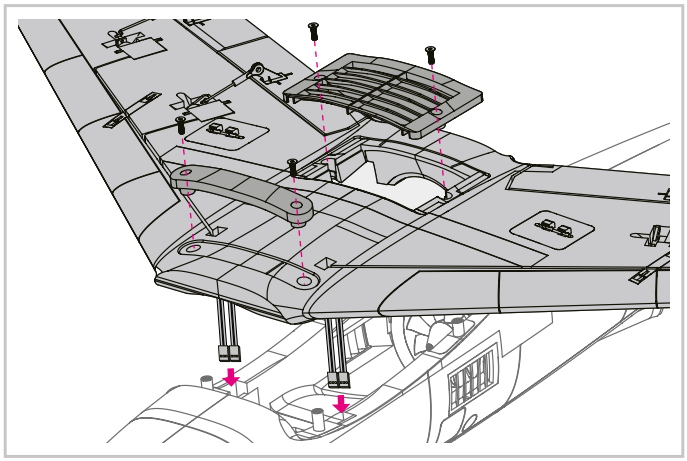

Horizontal stabilizer installation

1. Connect the elevator servo connectors to the servo extensions in the fuselage.Install the horizontal stabilizer into the slot in the fuselage.

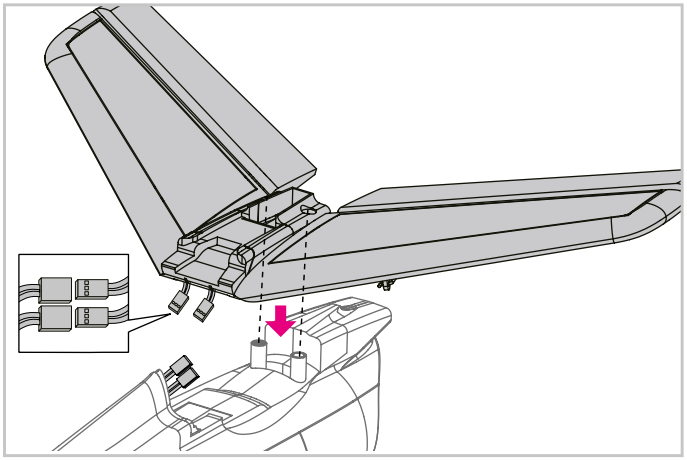

Vertical stabilizer installation

1. Connect the rudder servo connectors to the servo extensions in the fuselage. Install the vertical tail into the slot in the fuselage and secure with the included screws.

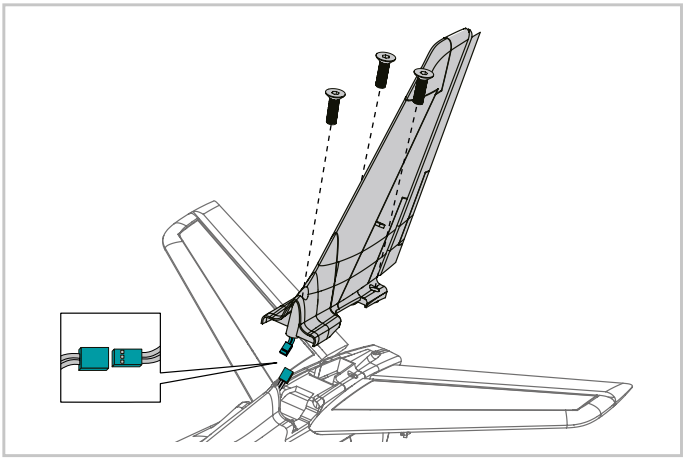

MODEL ASSEMBLY

Landing gear installation

1. Install the front landing gear into the slot at the bottom of fuselage and fix with included screw as shown.

2. Insert the main landing gear assembly into the wing landing gear slot and pivot 90 degrees to lock the landing gear in place.

Note: Main landing gear differs left & right.

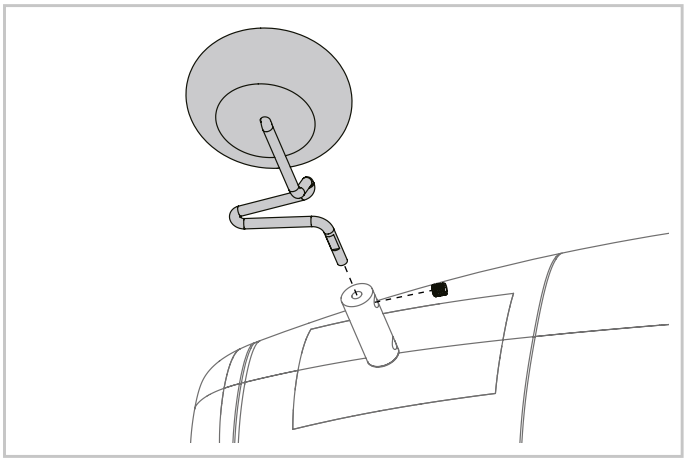

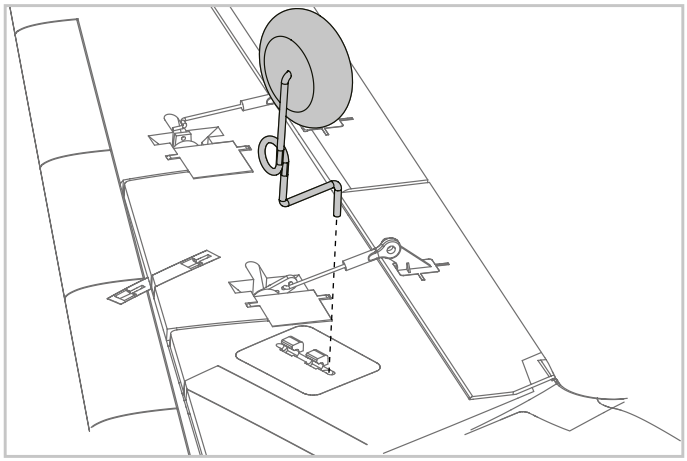

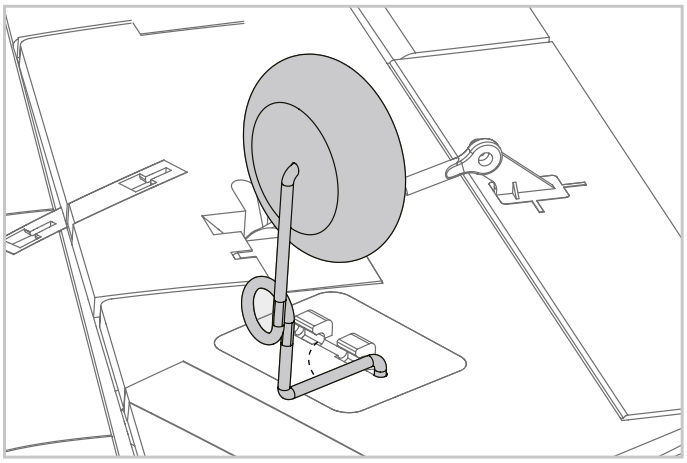

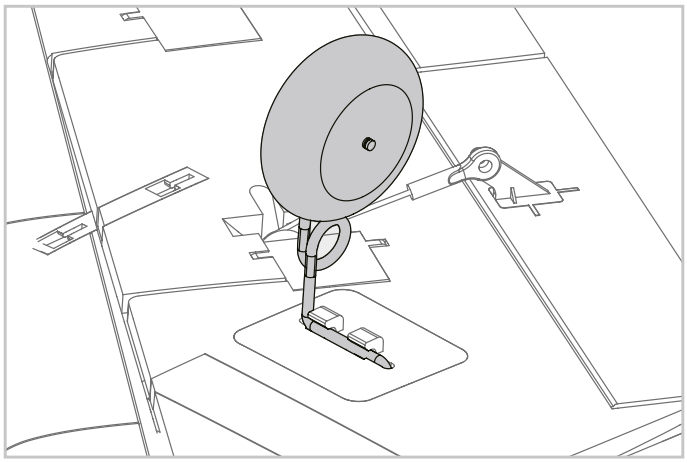

Auxiliary fuel tank installation

1.Slide the auxiliary fuel tank into the rail as shown

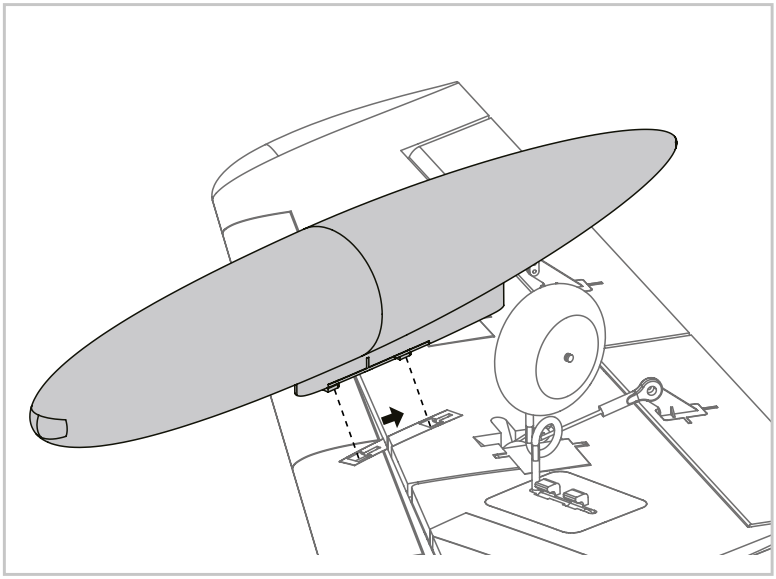

BATTERY INSTALLATION

1. Remove the battery cover.
2. Remove the hook and loop tape from the fuselage. Apply the looped surface to the battery.
3. Install the battery into the fuselage- securing it with the preinstalled battery straps.

Note: The weight of each battery may vary due to different manufacturing techniques. Move the battery fore or aft to achieve the optimal center of gravity.

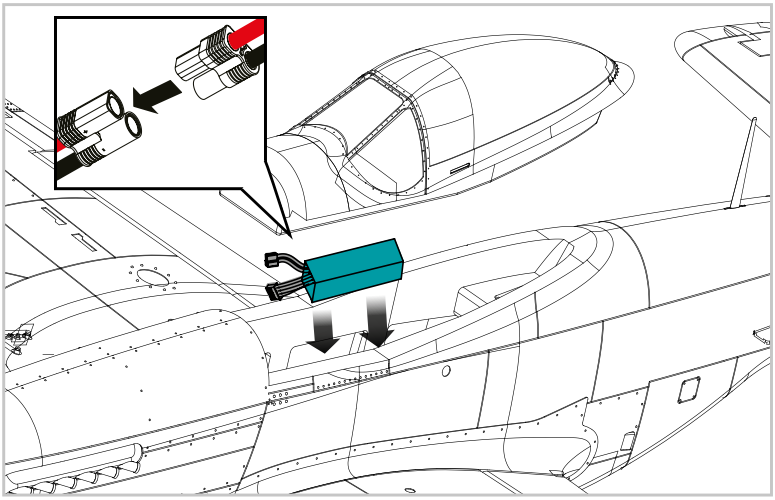

Receiver diagram

The cables from the servo connector board should be connected to your receiver in the order shown. Note that the LEDs can be powered by any spare channel on the receiver. Tuck the wire leads into the recessed cavity towards the rear of the battery hatch.

		RECEIVER
Ailero	1	Channel-1 (Aile.)
Elevator	2	Channel-2 (Elev.)
Throttle	3	Channel-3 (Thro.)
Rudder	4	Channel-4 (Rudd)
Spare	5	Channel-5 (Spare)
Flap	6	Channel-6 (Flap)

PREFLIGHT CHECK

Important ESC and model information

1. The ESC included with the model has a safe start. If the motor battery is connected to the ESC and the throttle stick is not in the low throttle or off position, the motor will not start until the throttle stick is moved to the low throttle or off position. Once the throttle stick is moved to the low throttle or off position, the motor will emit a series of beeps. Several beeps with the same tune means the ESC has detected the cells of the battery. The count of the beeps equals the cells of the battery. The motor is now armed and will start when the throttle is moved.
2. The motor and ESC come pre-connected and the motor rotation should be correct. If for any reason the motor is rotating in the wrong direction, simply reverse two of the three motor wires to change the direction of rotation.
3. The motor has an optional brake setting. The ESC comes with brake switched off and we recommend that the model be flown with the brake off. However, the brake could be accidentally switched on if the motor battery is connected to the ESC while the throttle stick is set at full throttle. To switch the brake off, move the throttle stick to full throttle and plug in the motor battery. The motor will beep one time. Move the throttle stick to low throttle or the off position. The motor is ready to run and the brake will be switched off.
4. Battery Selection and Installation. We recommend the 4S 2200mAh 35C Li-Po Li-Po battery. If using another battery, the battery must be at least a 4S 2200mAh 35C Li-Po battery. Your battery should be approximately the same capacity, dimension and weight as the 4S 2200mAh 35C Li-Po Li-Po battery to fit the fuselage without changing the center of gravity significantly.

PREFLIGHT CHECK

Transmitter and Model setup

After assembly and prior to your first flight, make sure all control surfaces respond correctly to your transmitter by referring to the diagram below.

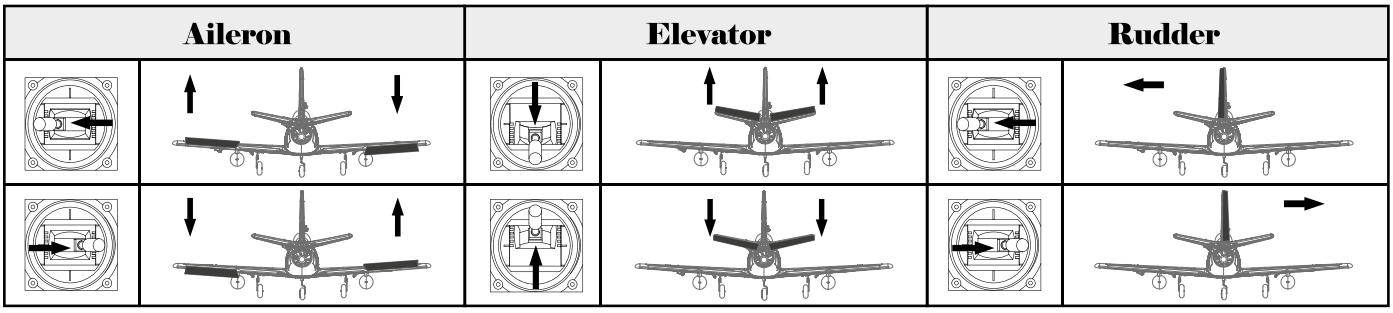

Control setup

The suggested control throw setting for the model are as follows (dual rate setting):

Tip: The maiden flight should always be flown using low rates, fly the aircraft until you are familiar with its characteristics prior to trying high rates. Make sure the aircraft is flying at altitude and adequate velocity prior to using high rates, as the aircraft will be sensitive to control inputs with the larger control surface movements.

	High rate	Low Rate
Elevetor	12mm Up/Down	10mm Up/Down
Aileron	10mm Up/Down	8mm Up/Down
Rudder	14mm Left/Right	12mm Left/Right

Clevis installation

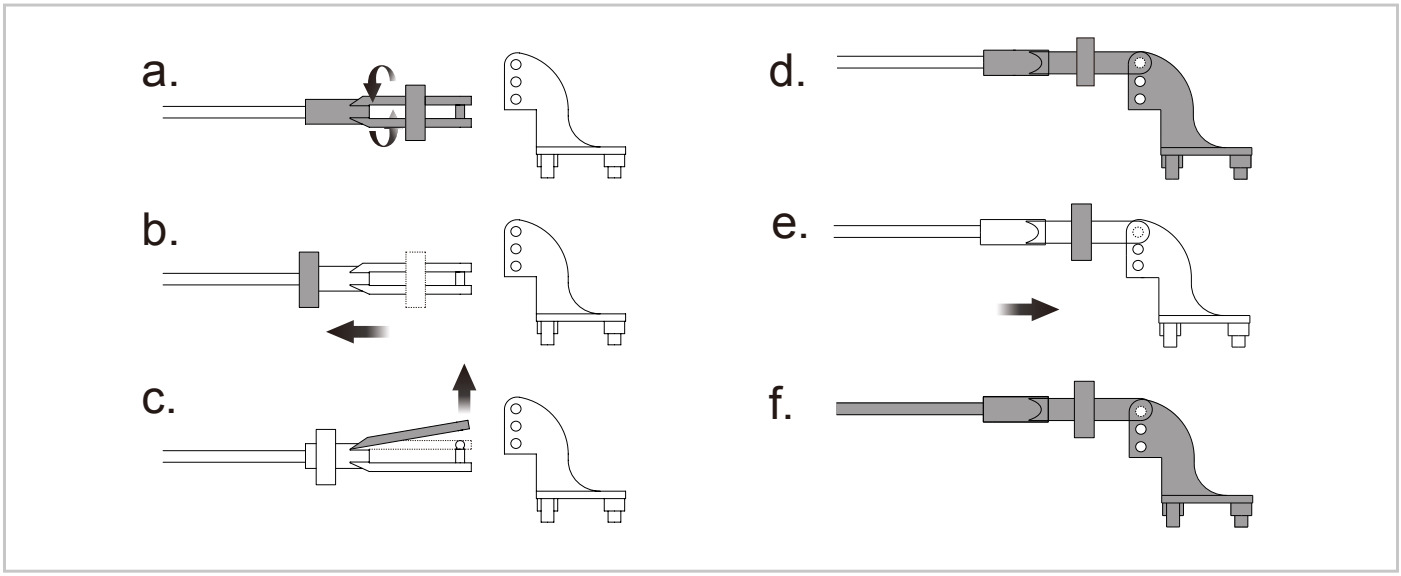

1. Pull the tube from the clevis to the linkage.
2. Carefully spread the clevis, then insert the clevis pin into the desired hole in the control horn.
3. Move the tube to hold the clevis on the control horn.

CONTROL HORN AND SERVO ARM SETTINGS

1. The table shows the factory settings for the control horns and servo arms. Fly the aircraft at the factory settings before making changes.

2. After flying, you may choose to adjust the linkage positions for the desired control response.

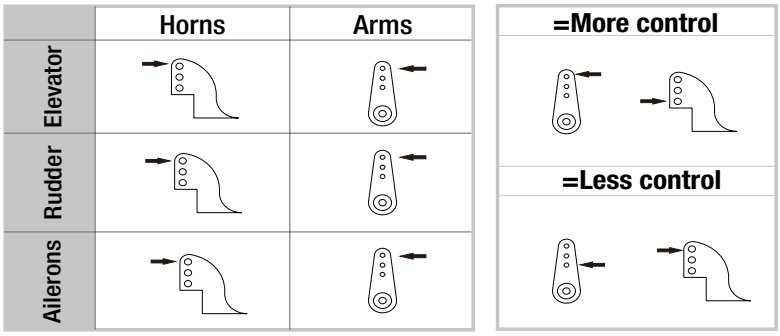

CENTRE OF GRAVITY

Finding the correct center of gravity is critical in ensuring that the aircraft performs in a stable and responsive manner. Please adjust the weight distribution so the aircraft balances in the range stated on the diagram.

- Depending on the capacity and weight of your chosen flight batteries, move the battery forward or backward to adjust the center of gravity.
- If you cannot obtain the recommended CG by moving the battery to a suitable location, you can also install a counterweight to achieve correct CG. However, with the recommended battery size, a counterweight is not required. We recommend flying without unnecessary counterweight.

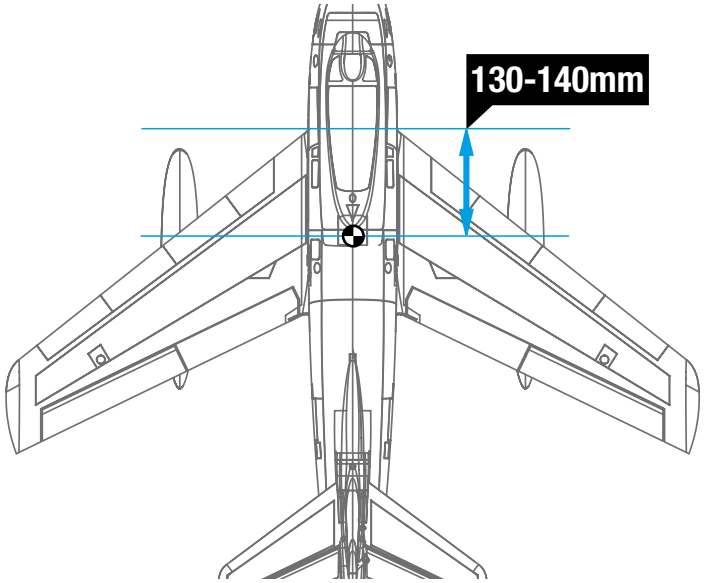

BEFORE FLYING THE MODEL

Find a suitable flying site

Find a flying site clear of buildings, trees, power lines and other obstructions. Until you know how much area will be required and have mastered flying your plane in confined spaces, choose a site which is at least the size of two to three football fields - a flying field specifically for R/C planes is best. Never fly near people - especially children, who can wander unpredictably.

Performing a range check

A radio range check should be performed prior to the first flight of the day. This test may assist you in detecting electronic problems that may lead to a loss of control- problems such as low transmitter batteries, defective or damaged radio com-ponents or radio interference. This usually requires an assistant and should be done at the flying site.

BEFORE FLYING THE MODEL

Always turn your transmitter on first. Install a fully charged battery in the battery bay, then connect it to the ESC. In this process, make sure that the throttle cut functionality is on, and that the throttle stick is secured in its lowest position- other-wise, the propeller/fan will engage and possibly cause bodily harm.

Note: Please refer to your transmitter manual that came with your radio control system to perform a ground range check. If the controls are not working correctly or if anything seems wrong, do not fly the model until you correct the problem. Make certain all the servo wires are securely connected to the receiver and the transmitter batteries have a good connection.

Monitor your flight time

Monitor and limit your flight time using a timer (such as a stopwatch or on the transmitter, if available). As modern Lithium Polymer batteries are not designed to discharge completely, when the battery runs low, the ESC will lower then completely cut the power to the motors to protect the battery.Often (but not always) power can be briefly restored after the motor cuts off by holding the throttle stick all the way down for a few seconds.To avoid an unexpected dead-stick landing on your first flight,set your timer to a conservative 4 minutes. When your alarm sounds you should land right away.

FLIGHT TIPS

Take off

Point the aircraft into the wind while slowly applying power until the aircraft starts to track straight, use the rudder when necessary. When the aircraft reaches takeoff speed, ease back on the elevator stick until the aircraft is climbing at a constant rate without decelerating. Climbing at too steep of an angle at the relatively low speeds of a takeoff-climb may result in an aerodynamic stall.

Flying

Always choose a wide-open space for flying your plane. It is ideal for you to fly at a sanctioned flying field. If you are not flying at an approved site always avoid flying near houses, trees, wires and buildings. You should also be careful to avoid flying in areas where there are many people, such as busy parks, schoolyards, or soccer fields. Consult laws and ordinances before choosing a location to fly your aircraft. After takeoff, gain some altitude. Climb to a safe height before trying technical manoeuvres.

Landing

Land the aircraft when you start to feel sluggish motor response. If using a transmitter with a timer, set the timer so you have enough flight time to make several landing approaches.The model's three point landing gear allows the model to land on hard surfaces. Align model directly into the wind and fly down to the ground. Fly the airplane down to the ground using 1/4-1/3 throttle to keep enough energy for proper flare. Before the model touches down, always fully decrease the throttle to avoid damaging the propeller or other components. The key to a great landing is to manage the power and elevator all the way to the ground and set down lightly on the main landing gear. With some practice, you will be able to set the aircraft gently on its main gear and hold it that way until the speed reduces enough where the nose wheel (tricycle landing gear aircraft) or tail wheel (tail draggers) settles onto the ground.

Maintenance

Repairs to the foam should be made with foam safe adhesives such as hot glue, foam safe CA, and 5min epoxy. When parts are not repairable, see the spare parts list for ordering by item number.

Always check to make sure all screws on the aircraft are tightened. Pay special attention to make sure the spinner is firmly in place before every flight.

TROUBLESHOOTING

PROBLEM	POSSIBLE CAUSE	SOLUTION
Aircraft will not respond to the throttle but responds to other controls.	• ESC is not armed. • Throttle channel is reversed.	• Lower throttle stick and throttle trim to lowest settings. • Reverse throttle channel on transmitter.
Excessive vibration or propeller noise.	• Damaged spinner, propeller, motor or motor mount. • Loose propeller and spinner parts. Propellor installed backwards.	• Replace damaged parts. • Tighten parts for propeller adapter, propeller and spinner. • Remove and install propeller correctly.
Reduced flight time or aircraft underpowered.	• Flight battery charge is low. Propeller installed backward. Flight battery damaged.	• Completely recharge flight battery. • Replace flight battery and follow flight battery instructions.
Control surfaces unresponsive or sluggish.	• Control surface, control horn, linkage or servo damage. • Wire damaged or connections loose.	• Replace or repair damaged parts and adjust controls. • Do a check of connections for loose wiring.
Controls reversed.	• Channels are reversed in the transmitter.	• Do the control direction test and adjust controls for aircraft and transmitter.
Motor loses power Motor power pulses then motor loses power.	• Damage to motor, or battery. • Loss of power to aircraft. • ESC uses default soft Low Voltage Cutoff(LVC).	• Do a check of batteries, transmitter, receiver, ESC, motor and wiring for damage(replace as needed). • Land aircraft immediately and recharge flight battery.
LED on receiver flashes slowly.	• Power loss to receiver.	• Check connection from ESC to receiver. • Check servos for damage. • Check linkages for binding.

SPARE PARTS LIST

AHAY101	Fuselage
AHAY102	Main wing set
AHAY103	Horizontal stabilizer
AHAY104	Vertical Stabilizer
AHAY105	Canopy
AHAY106	Wing bolt plastic set
AHAY107	Wing Pipe
AHAY108	Control horn
AHAY109	Front landing gear
AHAY110	Main landing gear set
AHAY111	Auxiliary fuel tank
AHAY112	Linkage Rods
AHAY113	Sticker
AHAY114	Screw Set
AHAY115	Steering wire
AHAY116	Aluminum sleeve
AHAY117	Landing gear base
AH64MM12B	64mm Ducted Fan(12-blade)
AHKV3150	Motor 2840-KV3150
AHESC40A-2	40A ESC
AH9GP	9g servo positive
AH9GR	9g servo reverse

This manual is the property of Pro Models and is protected by copyright ©.



Arrows RC is distributed by Pro Models

Geelseweg 80 • 2250 Olen • Belgium • info@promodels.be